DS3

Electric Pedestrian Stacker 1500KG

Let's grow together

- Entry level stacker with great ease of use, reduced maintenance costs and high capacity
- Wide mast selection up to 3.9 meters elevation
- Stability for medium level stacking
- Integrated charger for charging convenience
- Maintenance free battery with AGM or Li-Ion technology

CE

Manufacturer			EP
Model designation			DS3
Drive			Electric
Load capacity	Q	kg	1500
Load center distance	c	mm	600
Service weight		kg	540
Length to face of forks	l2	mm	577
Overall width	b1/b2	mm	834
Fork dimensions	s×e×l	mm	75/170/1150
Turning radius	Wa	mm	1470
Max. gradeability, laden/unladen		%	3/10
Battery voltage/nominal capacity		V/Ah	24/80

EP EQUIPMENT CO.,LTD
www.ep-equipment.com

V2502.06

FEATURE

Stability for medium level stacking

The DS3 is designed for stability when stacking loads at medium levels. With a maximum lift height of 3.9 meters, the DS3 is ideal for medium-height racks. Thanks to the enhanced mast with dual chains, the DS3 ensures stable and smooth elevation.

Modern design with exceptional durability

The DS3 features a sleek and streamlined appearance, similar to the ESA121. Its robust cover also offers great durability in any warehouse or storage environment.

Integrated charger for charging convenience

The DS3 is equipped with a 24V/10A integrated charger and a 24V/80Ah maintenance-free AGM battery as standard, ensuring both convenience and flexibility in daily operations.As option, the DS3 can be equipped with Lithium battery and a fast integrated charger.

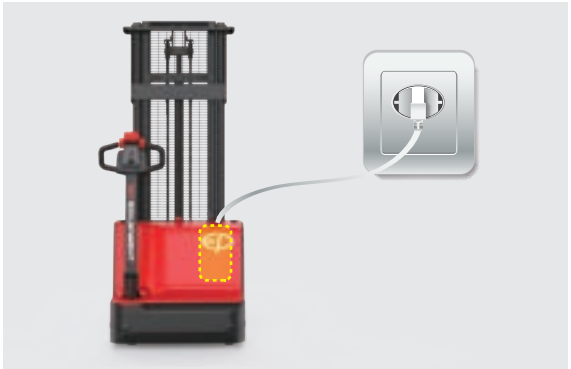

Operation safety assurance

For safety first, the DS3 comes with speed reduction when elevated as standard to protect operator and the goods. Additionally, the iron mesh guard on the mast acts as a protective barrier against falling objects.

The DS3 features two safety buttons, with all driving, lifting, and lowering controls ergonomically placed on the tiller head, making the machine both easy and safe to use.

Electric Pedestrian Stacker 1500KG

DS3

Distinguishing mark	1.1	Manufacturer			EP
	1.2	Model designation			DS3
	1.3	Drive			Electric
	1.4	Operator type			Pedestrian
	1.5	Load capacity	Q	kg	1500
	1.6	Load center distance	c	mm	600
	1.8	Load distance，centre of drive axle to fork	x	mm	802
	1.9	Wheelbase	y	mm	1210
Service weight	2.1	Service weight		kg	540
	2.2	Axle loading, laden front/rear		kg	645/1395
	2.3	Axle loading, unladen front/rear		kg	395/145
Tyres/chassis	3.1	Tyre type			Polyurethane
	3.2	Tyre size, front			Ø190×55
	3.3	Tyre size, rear			Ø74×88
	3.4	Additional wheels (castor wheels)		mm	Ø128×50
	3.5	Wheels, number front/rear (x=drive wheels)		mm	1x，1/2
	3.6.1	Tread width, front	b_{10}	mm	597
	3.7.1	Tread width, rear	b_{11}	mm	420
Dimensions	4.0	Max. Lift Height	H	mm	3018
	4.2	Retracted mast height	h_1	mm	2067
	4.4	Lift height	h_3	mm	2930
	4.5	Height, mast extended	h_4	mm	3532
	4.9	Height of tiller handle in drive position min./max.	h_{14}	mm	760/1140
	4.15	Lowered height	h_{13}	mm	90
	4.19	Overall length	l_1	mm	1727
	4.20	Length to face of forks	l_2	mm	577
	4.21	Overall width	b_1/b_2	mm	834
	4.22	Fork dimensions	s×e×l	mm	75/170/1150
	4.24	Fork carriage width	b_3	mm	680
	4.25	Fork spread	b_5	mm	570
	4.32	Ground clearance, center of wheelbase	m_2	mm	30
	4.34.1	Aisle width for pallets 1000×1200 crossways	Ast	mm	2302
	4.34.2	Aisle width for pallets 800×1200 lengthways	Ast	mm	2235
	4.35	Turning radius	Wa	mm	1470
Performance data	5.1	Travel speed, laden/unladen		km/h	4.0/4.5
	5.2	Lifting speed, laden/unladen		m/s	0.085/0.13
	5.3	Lowering speed, laden/unladen		m/s	0.105/0.085
	5.8	Max. gradeability, laden/unladen		%	3/10
	5.10	Service brake			Electromagnetic
Electric-engine	6.1	Drive motor rating S2 60 min		kW	0.75
	6.2	Lift motor rating at S3 15%		kW	2.2
	6.4	Battery voltage/nominal capacity		V/Ah	24/80
	6.5	Battery weight		kg	38
Drive/lift mechanism	8.1	Type of drive control			DC
Addition data	10.5	Steering design			Mechanical
	10.7	Sound pressure level at the driver's ear		dB(A)	74
	15.1	Charger output current		A	10

If there are improvements of technical parameters or configurations, no further notice will be given.
The diagram shown may contain non-standard configurations.

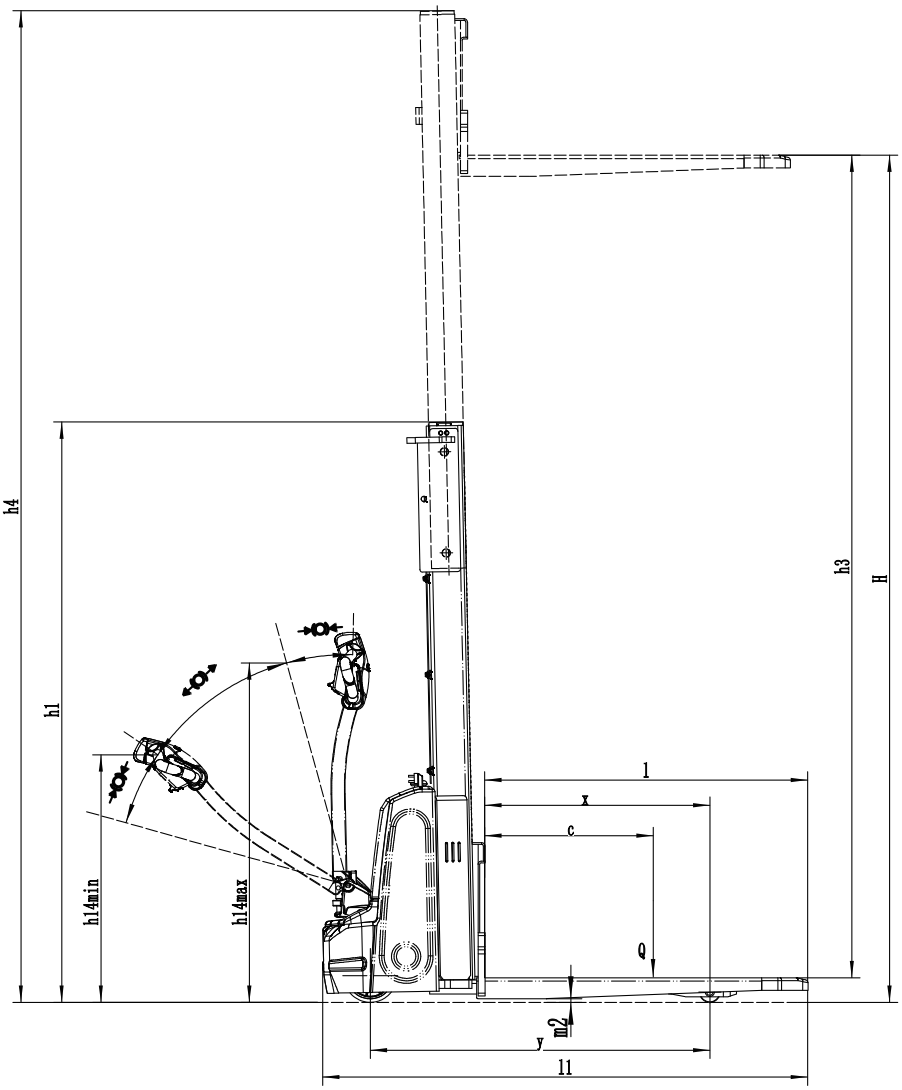
h4
h1
h14min
h14max
h3
H
l
x
c
Q
m2
y
l1

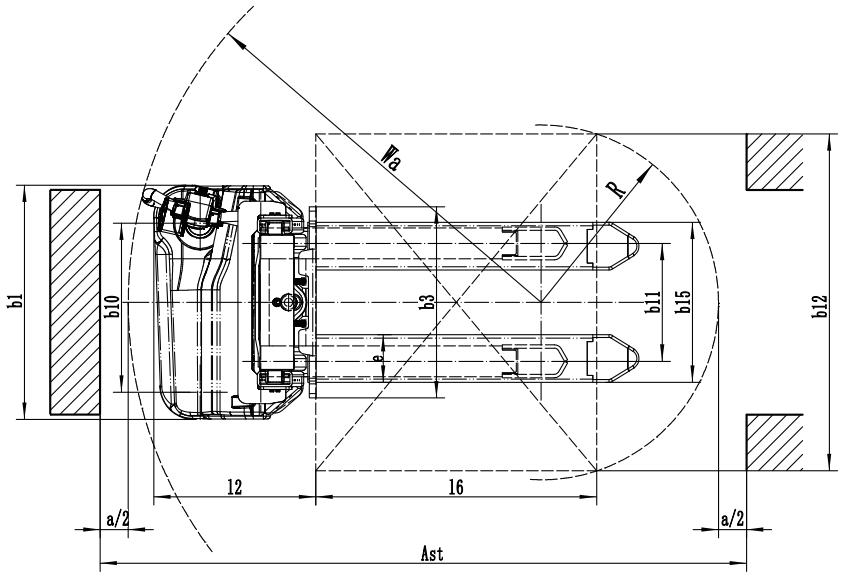
Wa
R
b1
b10
b3
b11
b15
b12
12
16
a/2
a/2
Ast

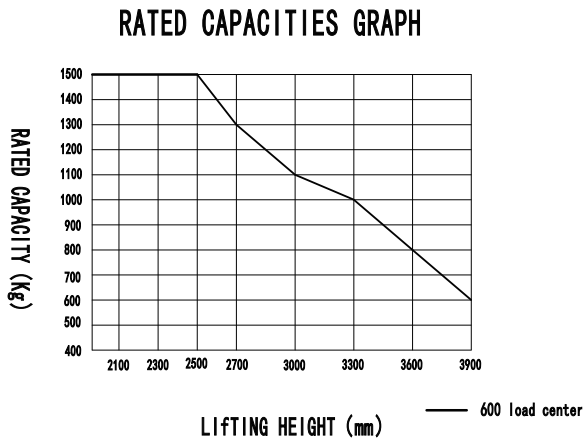

Mast Option

C Channel Beam

Mast types	Lift height h3+h13	Height, mast lowered h1	Free lift h2	Height, mast extended h4
	mm	mm	mm	mm
2-Standard Mast	2518	1817	——	3032
	2718	1917	——	3232
	3018	2067	——	3532
	3318	2217	——	3832
	3618	2367	——	4132
	3918	2517	——	4432

Option

Optionele items	DS3
Fork dimension	●570*1150○685*1150 ○570*1000○685*1000 ○570*1220○685*1220
Fork lowered height	●90
Fork carriage width	●680mm○795mm
Load wheel type	●Single
Load wheel material	●Polyurethane
Drive wheel material	●Polyurethane
Battery capacity	●80Ah (Lead acid) ○40Ah (Li-ion)
Charger	●24V-10A internal (Lead acid) ○24V-15A internal (Li-ion)
Battery indicator	●Without hourmeter
Tiller	● EP large tiller head (with finger controls including turtle button)
Castor wheels	●Yes and not customized
Vertical tiller creep speed	●Yes and not customized
Speed reduction with elevated mast	●Yes and not customized
Note： ●Standard ○ Optional - Inconformity	